Stepnet Micro Module

STL

DIGITAL DRIVE
FOR STEPPER MOTORS

Control Modes
- Indexer, Point-to-Point, PVT
- Camming, Gearing
- Position, Velocity, Torque [Servo Mode]
- Position (Microstepping)

Command Interface
- CANopen
- ASCII and discrete I/O
- Stepper commands
- PWM velocity/torque command
- Master encoder [Gearing/Camming]

Communications
- CANopen
- RS-232

Feedback
- Digital Quad A/B encoder

I/O - Digital
- 12 inputs, 4 outputs

Dimensions: mm [in]
- 64 x 41 x16 [2.5 x 1.6 x 0.6]

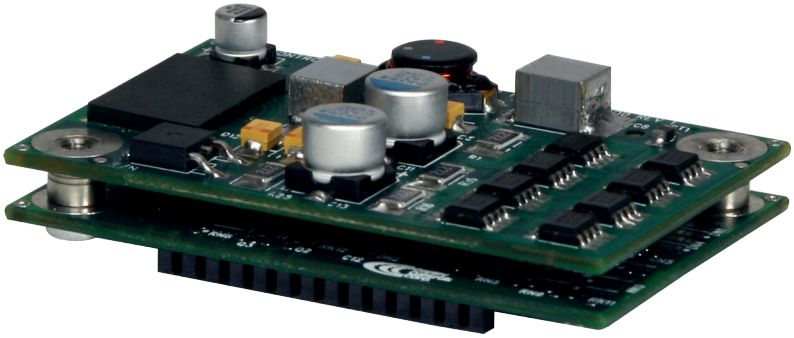

MODEL	Ic	Ip	VDC
STL-055-04	3	4.5	55
STL-075-03	2	3	75

DESCRIPTION

Stepnet Micro Module is a stepper motor driver in a 4 in2 pc-board mounting package that combines CANopen networking with 100% digital control of stepper motors. Power output is compatible with most NEMA 17 and 23 size stepper motors. The small footprint is well-suited for desktop instrumentation and enables motor drive, interface, power supply, and control circuits to be combined on a single PC board.

Stepnet Micro Module can also operate as a stand-alone driver taking incremental position commands from step-motor controllers in Step/Direction or CU/CD format, as well as A/B quadrature commands from a master-encoder. Step to motor position ratio is programmable for electronic gearing.

When fitted with an incremental encoder a stepper motor can be operated as a brushless servo motor using Stepnet Micro Module's Servo Mode feature, or as a conventional stepper with stall detection.

Set up is fast and simple using CME 2™ software operating under Windows® and communicating with Stepnet Micro Module via an RS-232 link. CAN address selection is by digital inputs or can be programmed into driver flash memory.

As a CANopen node Stepnet Micro Module operates as a Motion Control Device under the DSP-402 protocol of the CANopen DS-301 V4.01 (EN 50325-4) application layer. DSP-402 modes supported include: Profile Position, Profile Velocity, Interpolated Position (PVT), and Homing. When in Servo Mode, operating the stepper as a servo motor with encoder feedback, Profile Torque mode is available.

Profile Position Mode does a complete motion index on command with S-curve acceleration & deceleration, top speed, and distance programmable. In PVT mode, the controller sends out a sequence of points each of which is an increment of a larger, more complex move than that of a single index or profile. Profile Velocity mode has acceleration, deceleration, and velocity control without a position setpoint. Homing mode is configurable to work with a combination of limit and home switches such that the driver moves the motor into a position that has an absolute reference to some part of the machine.

One logic input [IN1] is dedicated for the driver Enable function. The other eleven are programmable as CAN address, limit & home switches, stepper pulse inputs, A/B master encoder, motor feedback encoder, reset, motion abort, or motor-temperature. There are four programmable logic outputs for reporting a driver fault, or other status indications. When operating as a CAN node, inputs and outputs can be used as general-purpose I/O with no link to amplifier functions.

An Aux HV input is provided for "keep alive" power that preserves the driver data (e.g. current position) and CANopen operation if +HV has been removed as in an emergency-stop situation. This enables the control system to monitor drive status and to enable an orderly recovery without a full system reset, and "homing" of all axes.

Operation from transformer-isolated DC power supplies saves cost in multi-axis systems.

GENERAL SPECIFICATIONS

Test conditions: Load = 1mH per phase, ambient temperature = 25 °C. +HV = HV_{max}

MODEL	STL-055-04	STL-075-03	
OUTPUT POWER			
Peak Current	4.5 (3.2)	3 (2.1)	Apeak (Arms, sinusoidal)
Peak time	1	1	s
Continuous current	3 (2.1)	2 (1.4)	Apeak (Arms, sinusoidal)
INPUT POWER			
HV_{min} to HV_{max}	+20 to +55	+20 to +75	Vdc, transformer-isolated
Ipeak	5.0	3.5	Adc (1 sec)
Icont	3.5	2.5	Adc
Aux HV	+20 to +55	+20 to +75	Vdc

CURRENT CONTROL		
Current loop update rate	15 kHz (66.7 µs)	
Position loop update rate	3 kHz (333 µs)	
PWM outputs	Dual MOSFET H-bridges, 15 kHz center-weighted PWM, space-vector modulation	
PWM ripple frequency	30 kHz	
HV Compensation	Changes in HV do not affect current-loop bandwidth	
REFERENCE INPUTS		
CANopen bus control	Operating Modes	Profile Position, Profile Velocity, Profile Torque (Note 2) Interpolated Position and Homing
	Velocity Modes	Profile Velocity
Digital position reference (Note 1)	Pls/Dir, CW/CCW	Stepper commands (2 MHz maximum rate)
	Quad A/B Encoder	2 Mline/sec, (8 Mcount/sec after quadrature)
Digital torque & velocity reference (Note 1) (only available in Servo Mode)	PWM & Polarity	PWM = 0~100%, Polarity = 1/0
	PWM	PWM = 50% +/-50%, no polarity signal required
	PWM frequency range	1 kHz minimum, 100 kHz maximum
	PWM minimum pulse width	220 ns
DIGITAL INPUTS (NOTE 1)		
Number	12	
Enable [IN1]	Dedicated input for driver enable	
GP [IN1,2,3,4,5]	General Purpose inputs with 33 µs (22 µs for [IN5]) RC filters and programmable functions	
HS [IN6,7,8,9,10,11,12]	High-Speed Inputs with 100 ns RC filters and programmable functions	
All inputs	74HC14 Schmitt trigger operating from +5.0 V with RC filter on input, 10 kΩ pull-up to +5 Vdc RC time-constants assume active drive on inputs and do not include 10 kΩ pull-ups.	
Input sample time	333 µs, inputs are sampled at each position loop cycle	
Logic levels	Vin-LO < +1.35 Vdc, Vin-HI > +3.65 Vdc, Maximum input voltage = +10 Vdc	
Minimum pulse width	1 ms	
DIGITAL OUTPUTS		
Number	4	
Type	Current-sinking MOSFET open-drain outputs with 1 kΩ pullup to +5 Vdc through diode, 300 mAdc sink max, +30 Vdc max.	
Functions	Programmable with *CME 2*™	
Active Level	Programmable to either HI (off, pull-up to +5 Vdc) or LO (on, current-sinking) when output is active	
DC POWER OUTPUT		
+5 Vdc	250 mA maximum. Directly connected to amplifier internal circuits. L-C filter required to isolate internal and external circuits	
RS-232 PORT		
Signals	RxD, TxD, Gnd	
Mode	Full-duplex, serial communication port for amplifier setup and control, 9,600 to 115,200 baud	
Protocol	ASCII or Binary format	
Multi-drop	ASCII interface from single RS-232 port to control multiple amplifiers (Xenus, Accelnet, Stepnet) Amplifier with serial connection acts as master for bi-directional data flow to other amplifiers using CAN connections in daisy-chain from amplifier to amplifier	
CANopen COMMUNICATION PORT		
Signals	CANH, CANL, Gnd. 1 Mbit/sec maximum	
Protocol	CANopen Application Layer DS-301 V4.01	
Device	DSP-402 Device Profile for Drives and Motion Control	
MOTOR CONNECTIONS		
Motor A+,A-,B+,B-	Outputs to 2-phase stepper motor, bipolar drive connected	
Motemp	Motor temperature sensor or switch. Any input [IN2~IN12] can be programmed for this function	
Brake	Any digital output can be programmed for motor brake actuation	
PROTECTIONS		
HV Overvoltage	> +56, +91 Vdc	Driver outputs turn off until +HV is < overvoltage (for 55, 75 Vdc models)
HV Undervoltage	< +20 Vdc	Driver outputs turn off until +HV >= +20 Vdc
Driver over temperature	PC Board > 90 °C.	Driver latches OFF until driver is reset, or powered off-on
Short circuits		Output to output, output to ground, internal PWM bridge faults
I^2T Current limiting		Programmable: continuous current, peak current, peak time
Latching / Non-Latching		Programmable

Notes

1. [IN1] is not programmable and always works as driver Enable. Other digital inputs are programmable.
2. Profile Torque mode is only available when operating in Servo Mode.

GENERAL SPECIFICATIONS (CONT'D)

MECHANICAL & ENVIRONMENTAL	
Size	2.50 in (63.5 mm) X 1.60 in (40.6 mm) X 0.71 in (18 mm)
Weight	1.3 oz (0.037 kg)
Ambient temperature	0 to +45°C operating, -40 to +85°C storage
Humidity	0 to 95%, non-condensing
Vibration	2 *g* peak, 10~500 Hz (sine), IEC60068-2-6
Shock	10 *g*, 10 ms, half-sine pulse, IEC60068-2-27
Contaminants	Pollution degree 2
Environment	IEC68-2: 1990
Cooling	Forced air cooling required for continuous power output
AGENCY STANDARDS CONFORMANCE	
In accordance with EC Directive 2004/108/EC (EMC Directive)	
EN 55011: 2007	CISPR 11:2003/A2:2006 Industrial, Scientific, and Medical (ISM) Radio Frequency Equipment – Electromagnetic Disturbance Characteristics – Limits and Methods of Measurement Group 1, Class A
EN 61000-6-1: 2007	Electromagnetic Compatibility (EMC) – Part 6-1: Generic Standards – Immunity for residential, Commercial and Light-industrial Environments
In accordance with EC Directive 2006/95/EC (Low Voltage Directive)	
IEC 61010-1:2001	Safety Requirements for Electrical Equipment for Measurement, Control and Laboratory Use
Underwriters Laboratory Standards	
UL 508C, 3rd Ed.: 2008	UL Standard for Power Conversion Equipment

FEATURES

Stepnet is a DSP based driver for two-phase step motors that operates as a node on a CAN bus or as a stand-alone driver that takes step motor pulses to command motor position. It operates from line-isolated DC power supplies.

As a CAN node it operates under the CANopen protocol DSP-402 for motion control devices. The functions supported include Profile Position, Profile Velocity, Interpolated Position, and Homing Modes. In Profile Position Mode a single PDO (Process Data Object) can command a position profile with programmable acceleration, deceleration, maximum speed, and target position. The acceleration can be trapezoidal or S-curve. Interpolated Position Mode works with multiple PDO's each of which specifies position, velocity, and time. For this reason this mode is sometimes called PVT (Position, Velocity, Time) mode. The driver uses a cubic-interpolation algorithm to connect the PVT points such that the motor satisfies the PVT parameters at each point while moving along a path that connects the points smoothly. In PVT mode long moves of complex shapes can be performed. Profile Velocity mode has controlled acceleration, deceleration, and maximum velocity for speed control application with no defined positions.

Multiple axes can be synchronized so that moves are coordinated. This emulates the functions normally performed by motion-controller cards or chips which can now be eliminated in many cases reducing cost and system complexity.

Stepnet also operates as a stand-alone driver taking pulses from controllers that output pulses in the Step/Direction or Count-Up/Count-Down mode. Electronic gearing is supported when the position commands come from a quadrature encoder. The ratio of encoder counts at the inputs to microsteps at the motor is programmable.

MICROSTEPPING

Step motors can be viewed as brushless motors with a large number of poles, or electrical cycles per revolution. The two windings are spaced at 90 electrical degrees. Reversing the currents in each winding produces a 180 degree phase shift. The result is full-stepping. This kind of operation can be noisy and the large angular change per step excites the rotor to produce undesirable vibrations. In microstepping, the phase currents are sinusoidal and the change in electrical angle per step can be programmed such that the motor moves with less noise and vibration.

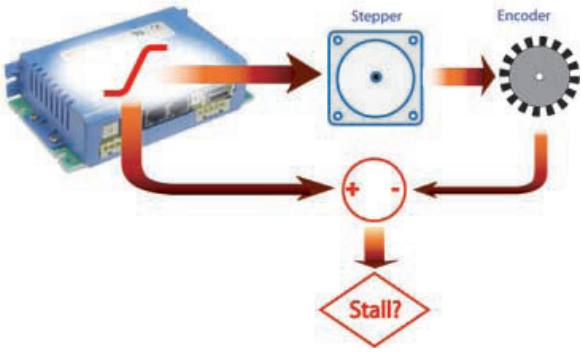

STALL DETECTION

Adding an encoder to the motor gives position feedback to the driver. When the measured movement of the motor differs from the commanded position by an amount that is programmable a motor stall is indicated. The driver can then signal the control system that a motor stall has occurred, or can send a message over the CAN bus with the same effect. In this mode the stepper is operated in open-loop mode where the driver changes the phase currents based on the commanded position of the motor.

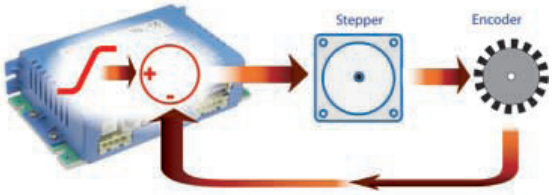

SERVO MODE

The stepper motor is now operated as a brushless servo motor. Motor phase currents are adjusted dynamically in response to the difference between commanded position and motor position as fed back by the encoder. Field-oriented control (vector control) of the motor currents gives a wider range of motor speeds without the possibility of stalling. If the load exceeds motor's capability excess following error can be detected and driver programmed to take appropriate action.

CME 2™ SOFTWARE

Driver setup is fast and easy using *CME 2™* software. All of the operations needed to configure the driver are accessible through this powerful and intuitive program. Motor data can be saved as .ccm files. Driver data is saved as .ccx files that contain all driver settings plus motor data. This eases system management as files can be cross-referenced to ampifiers. Once an driver configuration has been completed systems can be replicated easily with the same setup and performance.

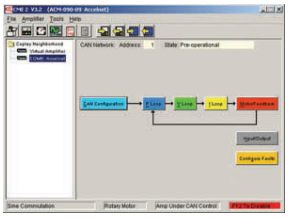

RS-232 COMMUNICATION

Stepnet is configured via a three-wire, full-duplex RS-232 port that operates from 9,600 to 115,200 Baud. *CME 2™* software provides a graphic user interface (GUI) to set up all of *Stepnet* features via a computer serial port. Once configured, *Stepnet* can be used in stand-alone mode, or as a networked driver on a CAN bus.

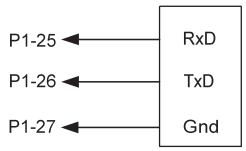

ICL3221
RS-232 Transceiver

CANopen COMMUNICATION

Stepnet Micro Module uses the CAN physical layer signals CANH, CANL, and GND for connection, and CANopen protocol for communication. The electrical interface is a TJA1050 high-speed CAN transceiver.

Before connecting *Stepnet Micro Module* to the CAN network, it must be assigned a CAN address. This can be done via the RS-232 port, or by using logic inputs for the CAN address bits. The CAN address is a combination of an internal address stored in flash memory, and an address derived from the logic inputs. A maximum of 127 CAN devices are allowed on a CAN bus network, so this limits the input pins used for this purpose to a maximum of seven, leaving five inputs available for other purposes. Most installations will use less than the maximum number of CAN devices, in which case the number of inputs used for a CAN address can be less than seven, leaving more inputs available for other functions.

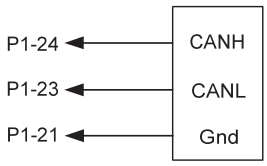

TJA1050
CAN Transceiver

When inputs are used for the CAN address bits, the internal address is added to the binary value that results from the inputs. If all the inputs are used as logic inputs, then the CAN address in flash memory is the driver CAN address.

STAND-ALONE MODE POSITION-CONTROL INPUTS

Stepnet works with motion controllers that output pulses to command position. These formats are supported:

Step/Direction
CU/CD
A/B Quadrature Encoder

In Step/Direction mode, a pulse-train controls motor position, and the direction is controlled by a DC level at the Direction input. CU/CD (Count-Up/Count-Down) signals command the motor to move CW or CCW depending on which input the pulse-train is directed to. The motor can also be operated in an electronic gearing mode by connecting the inputs to a quadrature encoder on another motor. In all cases the ratio between input pulses and motor revolutions is programmable.

STEP/DIRECTION INPUTS

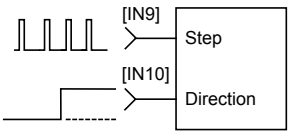

COUNT-UP/COUNT-DOWN INPUTS

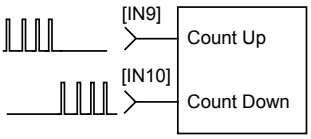

QUAD A/B ENCODER INPUTS

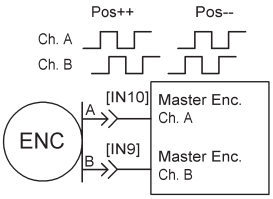

STAND-ALONE MODE TORQUE & VELOCITY INPUTS (SERVO MODE ONLY)

A digital PWM signal controls magnitude, and a DC signal controls polarity.

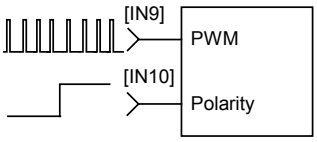

DIGITAL INPUTS

There are twelve digital inputs to *Stepnet Micro Module*, eleven of which can be programmed to a selection of functions. The Enable input which controls the on/off state of the PWM outputs is fixed to [IN1] as a safety measure so that a driver cannot be programmed in such a way that, once installed, it could not be shut down by the controller. Two types of RC filters are used: GP (General-purpose) and HS (High Speed). The input time-constants apply when driven by active sources (CMOS, TTL, etc). All inputs have 10 kΩ pull-up resistors to +5 Vdc. Input functions such as Step/Direction, CountUp/CountDown, Quad A/B must be wired to inputs having the HS filters, and inputs with the GP filters can be used for general purpose logic functions, limit switches, and the motor temperature sensor. When more than one input is programmed to the same function all must be active to assert the function. In addition to the selection of functions, the active level for each input is individually programmable.

GP input functions

- Drive enable
- CAN address
- Positive Limit switch
- Negative Limit switch
- Home switch
- Driver Reset
- Motor temperature sensor input
- Motion abort

HS input functions

- Step/Direction, or CountUp/CountDown step motor control commands
- Quad A/B master encoder position commands
- Motor-mounted feedback encoder

Driver reset takes place on transitions of the input and is programmable to 1/0 or 0/1. The motor temp sensor function will disable the driver if a switch in the motor opens or closes when the motor overheats.

GP INPUTS 1,2,3,4

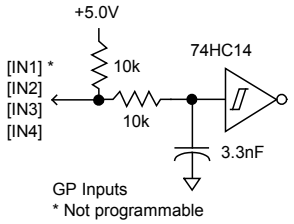

GP INPUT 5

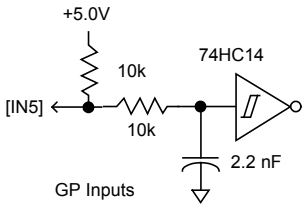

HS INPUTS 6,7,8,9,10,11,12

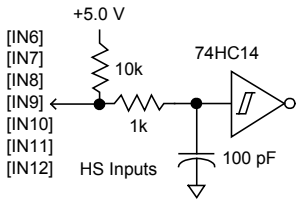

DIGITAL OUTPUTS

Digital outputs [OUT1~4] are open-drain MOSFETs with 1 kΩ pull-up resistors in series with a diode to +5 Vdc. They can sink up to 100 mAdc from external loads operating from power supplies to +30 Vdc. The outputs are typically configured as drive fault and motor brake. Additional functions are programmable. As a drive fault output, the active level is programmable to be HI or LO when a fault occurs. As a brake output, it is programmable to be either HI or LO to release a motor brake when the drive is enabled. When driving inductive loads such as a relay, an external fly-back diode is required. A diode in the output is for driving PLC inputs that are opto-isolated and connected to +24 Vdc. The diode prevents conduction from +24 Vdc through the 1 kΩ resistor to +5 Vdc in the drive. This could turn the PLC input on, giving a false indication of the drive output state.

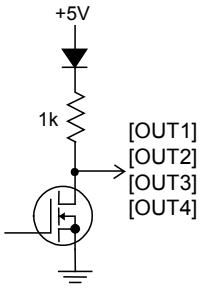

MOTOR CONNECTIONS

The only motor connections required for stepper operation are the motor phases. These carry the driver output currents that drive the motor to produce motion. The feedback encoder, brake, and motor over-temperature sensors are optional. If stall-detection is desired in stepper operation the encoder is required. When operating a stepper as a servo-motor the encoder is also required.

MOTOR PHASE CONNECTIONS

The driver output is a dual H-bridge that converts the DC buss voltage (+HV) into sinusoidal voltage waveforms that drive the motor phases. Cable should be sized for the continuous current rating of the driver. Motor cabling should use twisted, shielded conductors for CE compliance, and to minimize PWM noise coupling into other circuits.

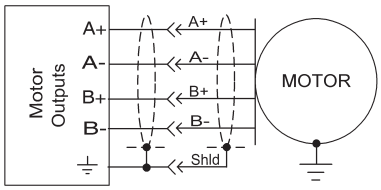

MOTOR TEMPERATURE SENSOR

Digital input [IN5] is programmable for use with a motor overtemperature switch. The input should be programmed as a pull-up to +5 Vdc if the motor switch is grounded.

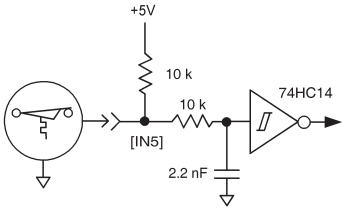

MOTOR BRAKE

Digital outputs [OUT1,2,3,4] can be programmed to power a motor-mounted brake. These brake the motor when they are in an unpowered state and must have power applied to release. This provides a fail-safe function that prevents motor motion if the system is in an unpowered (uncontrolled) state. Because brakes are inductive loads, an external flyback diode must be used to control the coil voltage when power is removed. The timing of the brake is programmable.

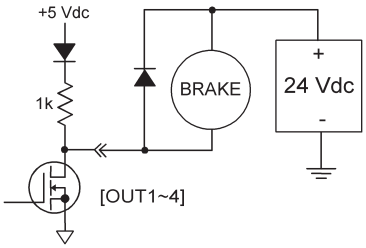

TYPICAL DRIVER CONNECTIONS

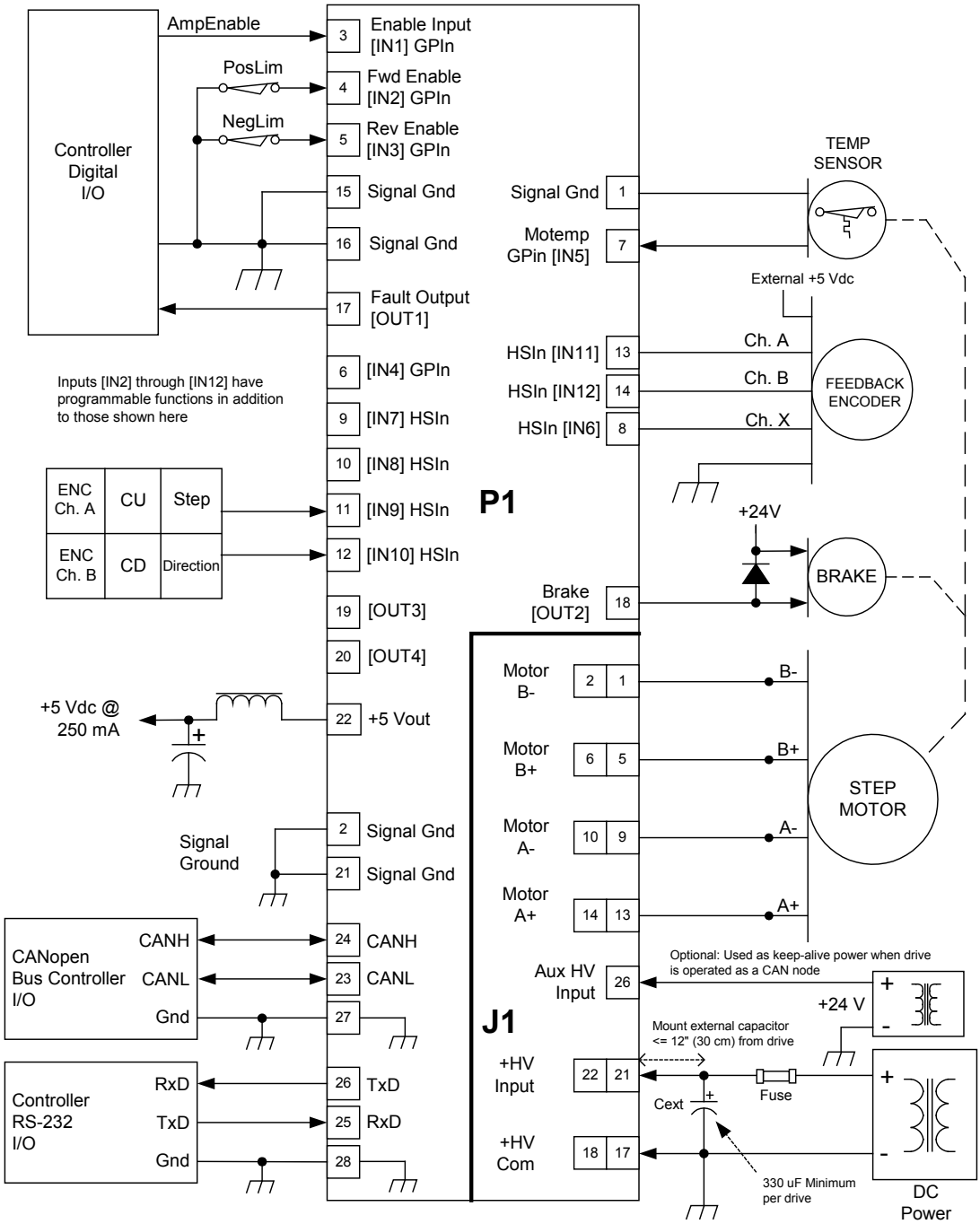

NOTES

1. [IN1] always functions as Drive Enable with programmable active level
   [IN2]~[IN12] have programmable functions and active level
2. HS inputs [IN6,7,8,9,10,11,12] are for high-speed signals and have 100 ns RC filters.
   GP inputs [IN1,2,3, & 4] have 33 µs filters, [IN5] has a 22 µs filter.
   RC filter time constants apply when inputs are driven by active sources and do not include the 10 kΩ pull-up resistors.

DIMENSIONS

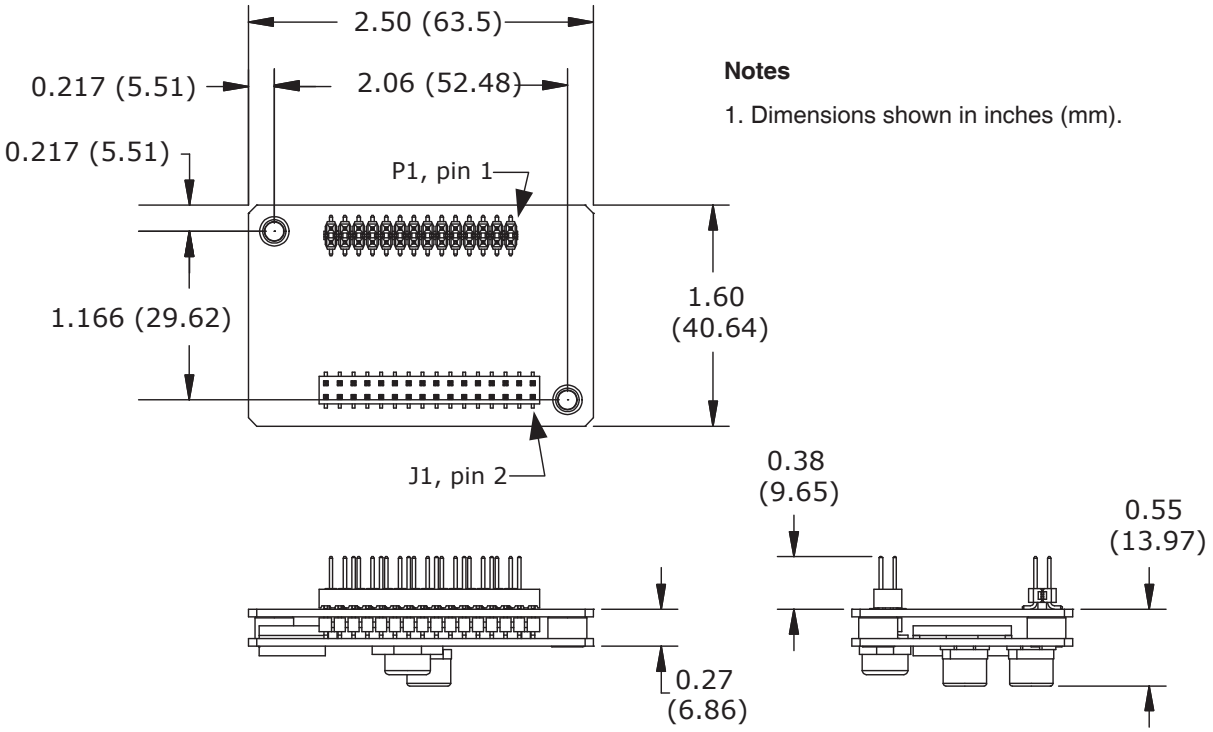

Notes

1. Dimensions shown in inches (mm).

COOLING REQUIREMENTS

From charts below, find power dissipation based on amplifier model, HV, and output current. With ambient temperature known, calculate required thermal resistance. Select cooling method that gives a thermal resistance that is equal to, or lower than the calculated value.

Example:
STL-055-04, HV = 55 Vdc, Iout = 2A
Power dissipation is 3.2 W
Amplifier thermal shutdown is at 90 °C, ambient is 45 °C
Thermal resistance required = (90 - 45) / 2.9 = 14.0
Convection cooling gives 16 °C/W, so forced-air is required.

Thermal Resistance (°C/W)	
Convection	*16*
Forced Air, 100 LFM	*10*
Forced Air, 200 LFM	*6*

STL-055-04 Dissipation (W)			
Iout (Adc)	**HV (Vdc)**		
	15	**35**	**55**
0	*2.3*	*2.2*	*2.4*
1	*2.4*	*2.4*	*2.6*
2	*2.8*	*2.9*	*3.2*
3	*3.6*	*3.6*	*4.1*
4	*4.7*	*4.7*	*5.2*

STL-075-03 Dissipation (W)			
Iout (Adc)	**HV (Vdc)**		
	15	**45**	**75**
0	*2.4*	*2.3*	*2.6*
1	*2.6*	*2.6*	*2.9*
2	*3.1*	*3.2*	*3.7*
3	*4.1*	*4.2*	*4.9*

POWER SUPPLIES

Stepnet Micro Module operates typically from transformer-isolated, unregulated DC power supplies. These should be sized such that the maximum output voltage under high-line and no-load conditions does not exceed the drivers maximum voltage rating. Power supply rating depends on the power delivered to the load by the driver.

Operation from regulated switching power supplies is possible if a diode is placed between the power supply and driver to prevent regenerative energy from reaching the output of the supply. If this is done, there must be external capacitance between the diode and driver. The minimum value required is 330 µF per driver mounted no more than 12 inches from the driver.

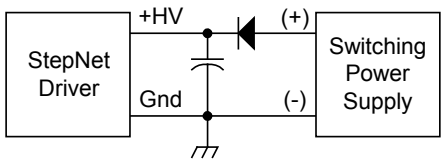

AUX HV (Optional)

CANopen communications with *Stepnet Micro Module* can be maintained when +HV is turned off by using the Aux HV input. The voltage has the same range as +HV, and can be greater or less than +HV.

In operation, the Aux HV keeps the driver logic and control circuits active so it is always visible as a node on a CAN bus. The current-position data is maintained making 'homing' unnecessary after system power is re-enabled. If *Stepnet Micro Module* is operating as a stand-alone driver, Aux HV is not necessary but can be useful if the controller is monitoring driver digital outputs.

GROUNDING CONSIDERATIONS

Power and control circuits in *Stepnet* share a common circuit-ground (Gnd on J1-4, Signal Ground on J3-7 & 25 and J4-3 & 4). Input logic circuits are referenced to Signal Ground, as are power GND, digital outputs, and encoder. For this reason, driver Gnd terminals should connect to the users' common ground system so that signals between driver and controller are at the same common potential, and to minimize noise. The system ground should, in turn, connect to an earthing conductor at some point so that the whole system is referenced to "earth".

Because current flow through conductors produces voltage-drops across them, it is best to connect the driver HV GND to system earth, or circuit-common through the shortest path, and to leave the power-supply floating. In this way, the power supply (-) terminal connects to ground at the driver HV Return terminals, but the voltage drops across the cables will not appear at the driver ground, but at the power supply negative terminal where they will have less effect.

For CE compliance driver cables should be shielded. Motor phase currents are balanced, but currents can flow between the PWM outputs, and the motor cable shield.

Signals from controller to driver are referenced to +5 Vdc, and other power supplies in user equipment. These power supplies should also connect to system ground and earth at some point so that they are at same potential as the driver circuits. The final configuration should embody three current-carrying loops. First, the power supply currents flowing into and out of the driver at the +HV and Gnd pins on J1. Second the driver outputs driving currents into and out of the motor phases, and motor shield currents circulating between the A+, A-, B+, & B- outputs and HV common. And, lastly, logic and signal currents connected to the driver control inputs and outputs.

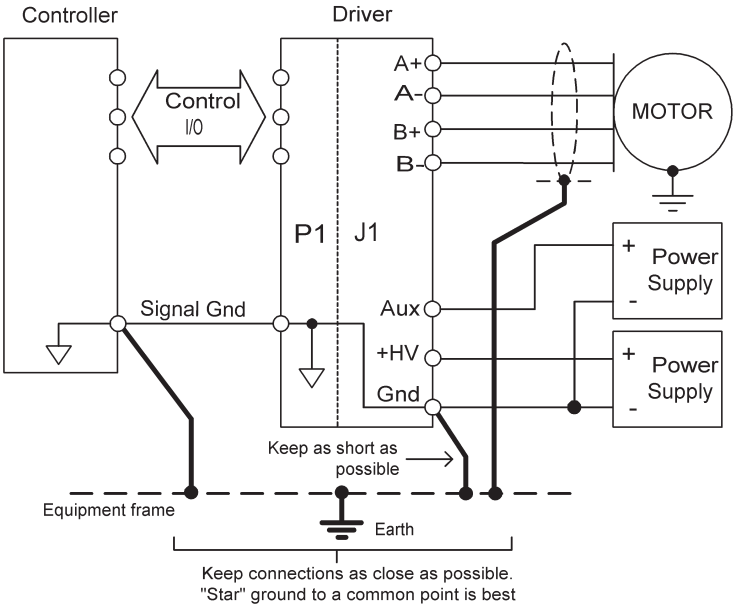

MOUNTING AND COOLING

Stepnet Micro Module mounts on PC boards using two, dual-row, 0.1" female headers. These permit easy installation and removal of the driver without soldering. Threaded standoffs swaged into the PC board provide positive retention of the driver and permit mounting in any orientation. Cooling is by convection, or external fan-supplied forced air.

PC BOARD DESIGN

The peak voltage between adjacent traces will be equal to +HV. Trace width and copper plating thickness should support the driver peak and continuous output current ratings.

Printed circuit board layouts for *Stepnet Micro Module* drivers should follow some simple rules:

1. Install a low-ESR electrolytic capacitor not more than 12 inches from the driver. PWM drivers produce ripple currents in their DC supply conductors. *Stepnet Micro Module* drivers do not use internal electrolytic capacitors as these can be easily supplied by the printed circuit board. In order to provide a good, low-impedance path for these currents a low-ESR capacitor should be mounted as close to the driver as possible. 330 µF is a minimum value, with a voltage rating appropriate to the driver model and power supply.

2. Connect J1 signals (A+,A-,B+,B- outputs, +HV, and +HV Common) in pin-groups for current-sharing. The signals on J1 are all higher-current types. To carry these currents (up to 3 Adc peak) the pins of J1 must be used in multiples to divide the current and keep the current carrying capacity of the connectors within specification. The diagram on page 9 shows the pin groups that must be inter-connected to act as a single connection point for pc board traces.

3. Follow IPC-2221 rules for conductor thickness and width of J1 signals.

Minimum trace width, and copper plating thickness should follow industry-standards (IPC-2221). The width and plating should depend on the model of driver used, the maximum voltage, and maximum current expected to be used for that model. Power supply traces (+HV, +HV Common) should be routed close to each other to minimize the area of the loop enclosed by the driver DC power. Noise emission or effects on nearby circuitry are proportional to the area of this loop, so minimizing it is good layout practice. Motor signals should also be routed close together. Output pairs (A & /A, B & /B) should be routed as closely as possible to form a balanced transmission path. Keeping these traces as closely placed as possible will again minimize noise radiation due to motor phase currents. *Stepnet Micro Module* circuit grounds are electrically common, and connect internally. However, the J1 signals carry high currents while the grounds on P1 (signal ground) carry low currents. So, P1 signals should be routed away from, and never parallel to the signals on J1.

+5 VDC OUTPUT

The amplifier internal +5 Vdc power is made available at P1-22. The output current is 250 mA maximum. This power should be used with care as there is no linear regulator between the amplifier internal power supply and the external circuits as in other Copley amplifiers with +5 Vdc outputs. When using this power an L-C filter is required. This consists typically of a ferrite-core inductor and an electrolytic capacitor. A typical value for the capacitor would be 4.7 µF. The inductor can be 50~150 µH and should be rated for DC current of 250 mA minimum. The capacitor should have a return path to amplifier power ground (J1-17, 18).

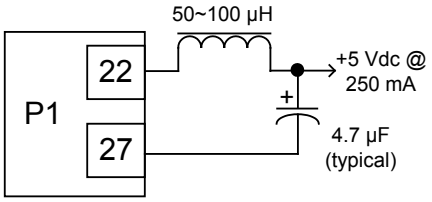

IMPORTANT: WHEN USING AMPLIFIER IN THE DEVELOPMENT KIT, REMOVE JUMPER JP9-D BEFORE CONNECTING EXTERNAL +5V POWER TO J8-1. FAILURE TO DO SO WILL DAMAGE AMPLIFIER!!

DRIVER PC BOARD CONNECTORS

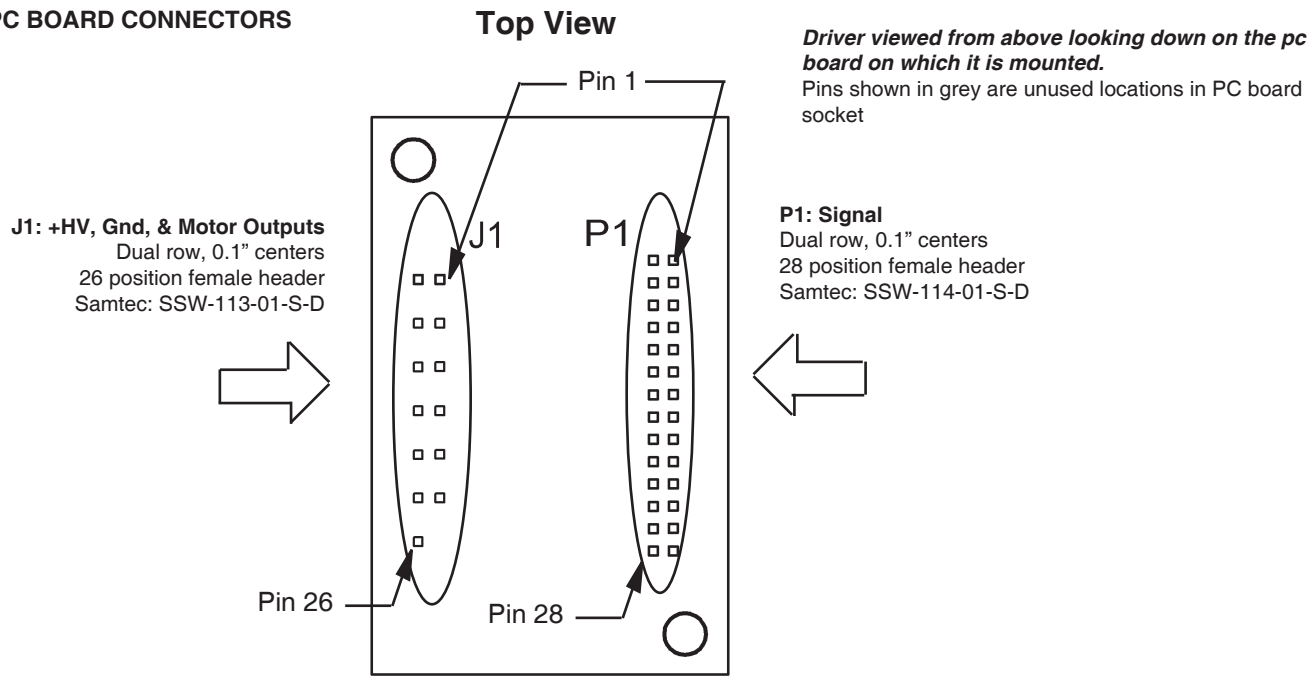

Driver viewed from above looking down on the pc board on which it is mounted.
Pins shown in grey are unused locations in PC board socket

SIGNALS	J1 Pin		SIGNALS
Motor B-	2	1	Motor B-
	4	3	
Motor B+	6	5	Motor B+
	8	7	
Motor A-	10	9	Motor A-
	12	11	
Motor A+	14	13	Motor A+
	16	15	
HV COMMON	18	17	HV COMMON
	20	19	
+HV	22	21	+HV
	24	23	
Aux HV	26	25	**Reserved**[3]

SIGNALS	P1 Pin		SIGNALS
Signal Ground	2	1	Signal Ground
[IN2]	4	3	[IN1]
[IN4]	6	5	[IN3]
[IN6]	8	7	[IN5]
[IN8]	10	9	[IN7]
[IN10]	12	11	[IN9]
[IN12]	14	13	[IN11]
Signal Ground	16	15	Signal Ground
[OUT2]	18	17	[OUT1]
[OUT4]	20	19	[OUT3]
+5 Vdc @ 250 mA	22	21	Signal Ground
CANH	24	23	CANL
RS-232 TxD	26	25	RS-232 RxD
Signal Ground	28	27	Signal Ground

NOTES

1. Grey-shaded signal are N.C. (No Connection)
2. Signals are grouped for current-sharing on the power connector. When laying out pc board artworks, all pins in groups having the same signal name must be connected.
3. Do not connect to this pin. Function is reserved.

PC BOARD MOUNTING FOOTPRINT

Top View
Dimensions in inches (mm)

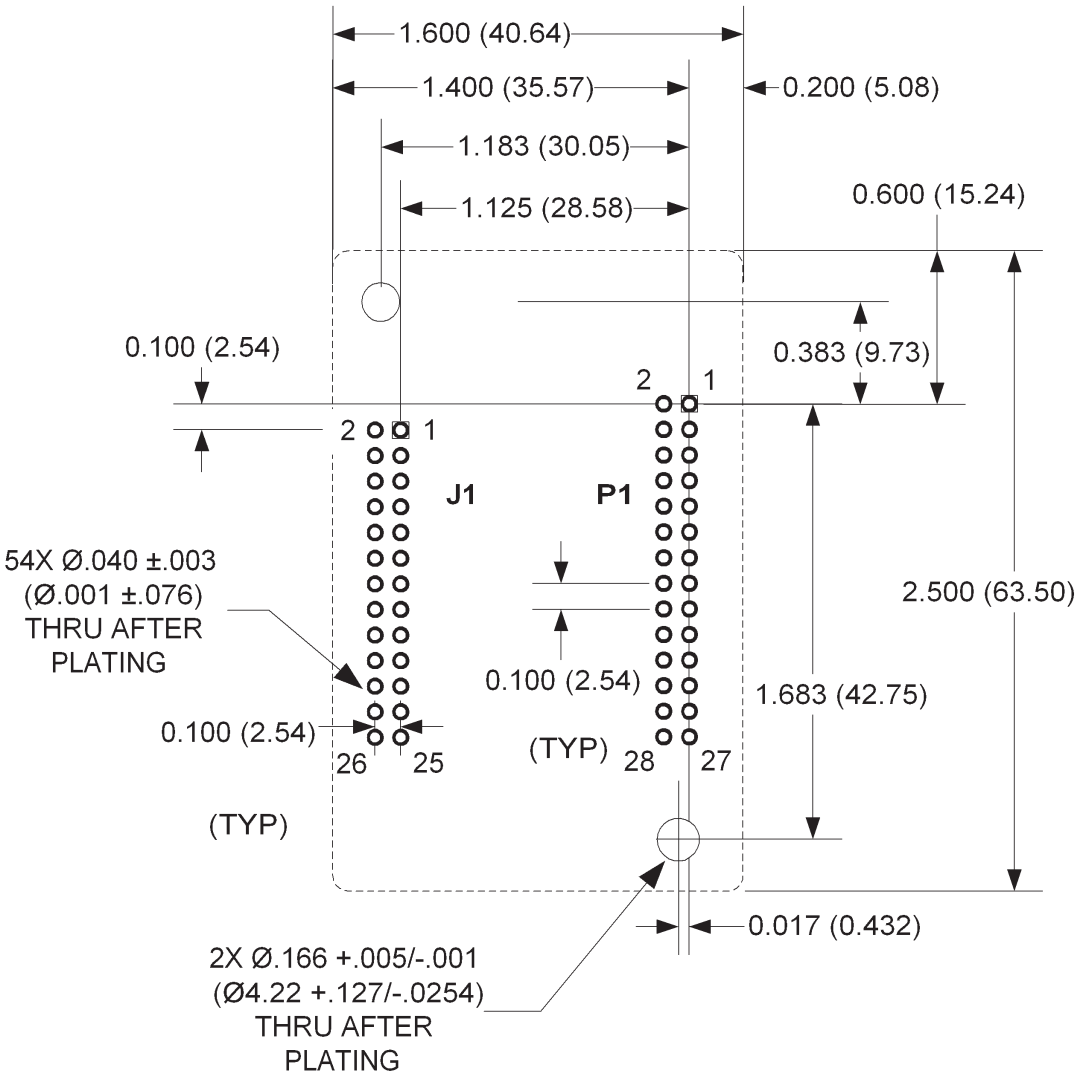

Stepnet Micro Module Mounting Hardware:

Qty	Description	Mfgr	Part Number	Remarks
1	Socket Strip	Samtec	SSW-113-01-S-D	J1
1	Socket Strip	Samtec	SSW-114-01-S-D	P1
2	Standoff 4-40 X 1/2”	PEM	KFE-440-16-ET	

NOTES

1. J1 pins with the same signal name must be connected for current-sharing.
2. To determine copper width and thickness for J1 signals refer to specification IPC-2221. (Association Connecting Electronic Industries, http://www.ipc.org)
3. Standoffs should be connected to etches on pc board that connect to frame ground for maximum noise suppression and immunity.

DESCRIPTION

The Development Kit provides mounting and connectivity for a Stepnet driver. Solderless jumpers ease configuration of inputs and outputs to support their programmable functions. Switches can be jumpered to connect to digital inputs 1~6 so that these can be toggled to simulate equipment operation. Four LED's provide status indication for the digital outputs. A differential line receiver converts motor encoder outputs to single-ended signals for position feedback. Dual CAN bus connectors make daisy-chain connections possible so that other CANopen devices such as Copley's Accelnet or Xenus amplifiers can easily be connected to build mixed stepper and servo multi-axis systems.

RS-232 CONNECTION

The RS-232 port is used to configure *Stepnet* for stand-alone applications, or for configuration before it is installed into a CANopen network. CME 2™ software communicates with *Stepnet* over this link and is then used for complete amplifier setup. The CAN address that is set by the rotary switch can be monitored, and an address offset programmed as well. This will add to the switch address to produce a working CAN address that can be from 1 to 127.

The RS-232 connector, J4, is a modular type that uses a 6-position plug, four wires of which are used for RS-232. A connector kit is available (SER-CK) that includes the modular cable, and an adaptor to interface this cable with a 9-pin RS-232 port on a computer.

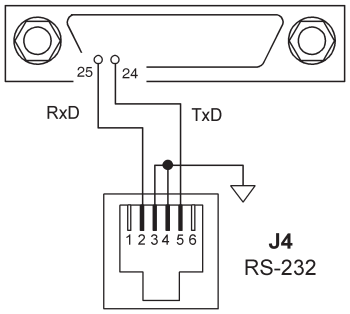

CAN CONNECTIONS

Connectors J6 & J7 are Sub-D male and female 9-position types that conform to the CAN DS-102 Physical Layer specification. The male-female configuration supports a single cable type with male and female connectors that can be daisy-chained from device to device along a CANopen network.

Stepnet uses only the CAN_H, CAN_L, and CAN_GND signals. The CAN_GND is connected to the circuit ground on the development kit. This ground is also shared by the amplifier power supply, accessory +5V (for encoders), and the RS-232 link. Other DS-102 signals are wired-through for use by products that might support them.

The table below lists the signals and pins on J6 & J7. Signals in ( ) are those that have no connection on the development kit and which are connected pin-to-pin between J6 & J7.

CAN Bus Connector Signals

* These signals connect through from J6 to J7 with no connection to Development Kit PC board.

	PIN	SIGNALS
*	1	(Reserved)
	2	CAN_L
	3	CAN_GND
*	4	(Reserved)
*	5	(CAN_SHLD)
	6	No connection
	7	CAN_H
*	8	(Reserved)
*	9	(Reserved)

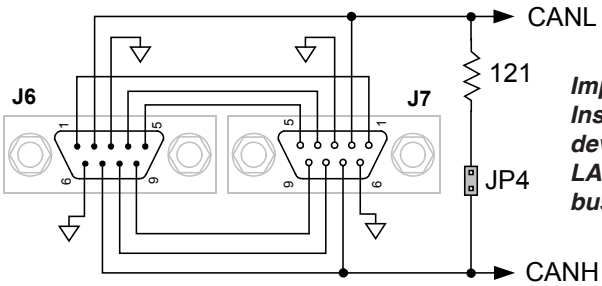

Important! Install JP4 ONLY if development kit is the LAST node on a CAN bus

CAN ADDRESS SELECTION

Rotary switch SW7, labeled “CAN ADDR” connects to IN7, IN8, IN9, and IN10 of the amplifier. These are programmable inputs which default to CAN address bits. The switch will select CAN addresses 0x01~0x0F (dec 1~15) . Address 0 is reserved for network management devices. The CAN standard permits up to 127 devices, so if the amplifier must have a address beyond 0x0F(dec 15), this is done by programming an address offset into the amplifier before it is installed into a CAN environment or by programming logic inputs as CAN address bits. See the *Stepnet* datasheet for more details on CAN address setup.

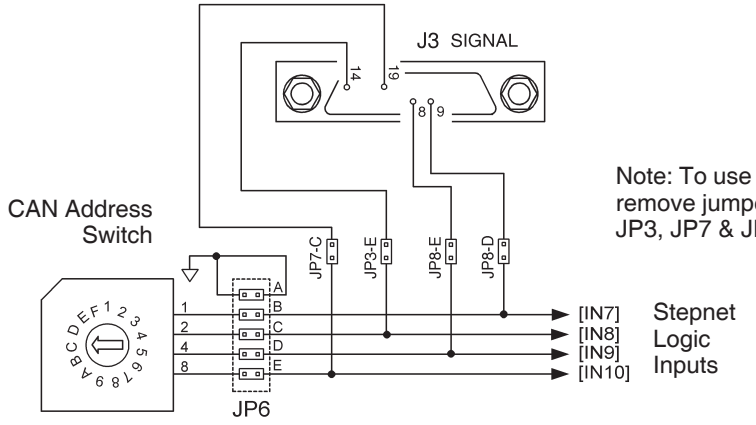

Note: To use inputs 7,8,9, or 10 as logic inputs remove jumpers on JP6 and insert jumpers on JP3, JP7 & JP8 as shown at left.

LOGIC INPUTS

Stepnet has twelve logic inputs. [IN1] is dedicated to the amplifier enable function, the other inputs are programmable.

The development kit is equipped with switches that can be used to control logic inputs 1~5. To use these switches jumpers JP2-A,B,C,D, and JP1-A must be installed.

If connecting these logic inputs to external equipment, the same jumpers must be removed so that the switches cannot short input signals to ground.

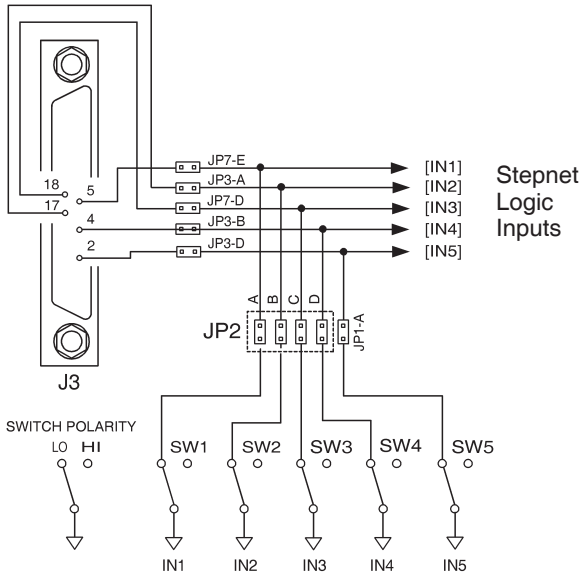

LOGIC OUTPUTS

Stepnet has four logic outputs that can drive controller logic inputs or relays. If relays are driven, then flyback diodes must be connected across their terminals to clamp overvoltages that occur when the inductance of the relay coil is suddenly turned off.

As delivered, these outputs drive four LED’s. Jumpers JP1-B,C,D, & E connect these LED’s to logic outputs. These are N-channel MOSFET’s which sink current from loads connected to positive voltages. When the outputs are ON (Active Low), they ground the cathode of the led’s which then turn on as they are connected to the +5Vdc supply via current-limiting resistors.

The logic outputs also connect to signal connector J3. If they are used to drive external loads >+5Vdc, the LED jumpers must be removed.

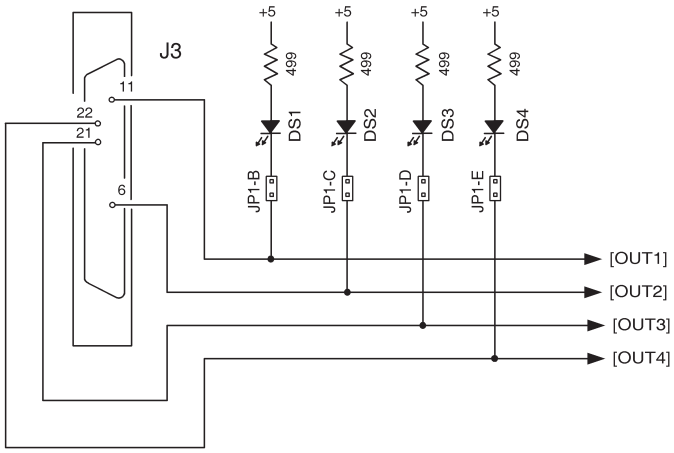

ENCODER CONNECTIONS

The development kit has a 26C32 differential line receiver for the motor encoder inputs. Differential-output encoders are preferred for best signal quality and noise rejection. Wiring should be twisted-pairs, preferably with a shield for each pair. To eliminate noise on the encoder signals caused by reflections on the cables, it is good practice to terminate signal-pairs with a resistor that matches the characteristic impedance of the cable. On the development kit, 121Ω resistors are provided for this purpose. Jumpers at JP9-A, B, and C connect these termination resistors across the differential signals when installed.

If single-ended encoders are used, they must have active (not open-collector) outputs. They should be connected to the A, B, and X pins leaving the /A, /B, and /X pins open. Jumpers at JP9-A, B, and C must be removed.

Note that [IN6] is also connected to switch SW-6. If the encoder index (X, /X) signal is used then jumper JP2-E must be removed so that SW-6 cannot ground the encoder signal from the 26C32.

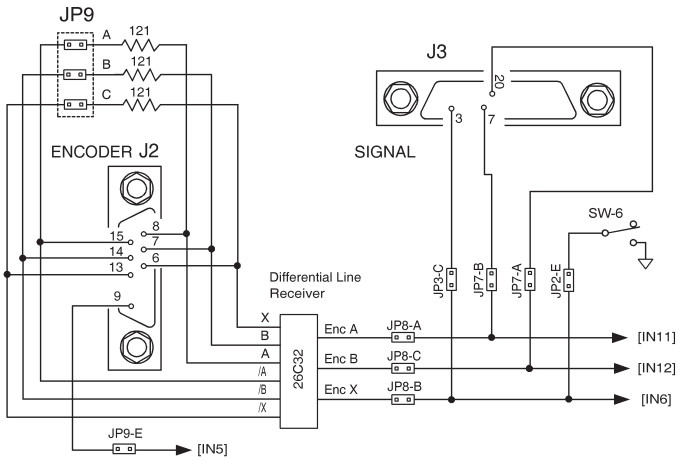

POWER SUPPLIES

+HV

Amplifier main power, +HV, is typically supplied by unregulated DC power supplies. These must be isolated from the mains, and all circuits should be grounded to earth at some point. The +HV supply connects to J1. For good wiring practice, the +HV wires should be twisted together for noise suppression, and the power supply should not be grounded. Doing this ensures that the higher currents flowing in these conductors will not flow through any circuit grounds where they might induce noise.

During deceleration, mechanical energy in the motor and load is converted back into electrical energy that must be dissipated as the motor comes to a stop. While some of this is converted to heat in the motor windings, the rest of it will flow through the amplifier into the power supply. An external storage capacitor should be used if the load has appreciable inertia, and this should be sized such that adding the undissipated energy from the motor will not raise the voltage beyond the point at which the amplifier shuts down. When this is not possible, an external 'dumper', or regenerative energy dissipater must be used which acts as a shunt regulator across the +HV and Gnd terminals.

SWITCHING POWER SUPPLIES

Switching power supplies can also be used to power *Stepnet*. Unlike unregulated supplies, these cannot accept reverse energy flow, so an isolating diode must be placed between the power supply and J1-1 to block current flow back into the power supply. When this is done, an external storage capacitor must be used across J1-1 & J1-2 because the capacitor on the Development Kit board is only for ripple-current control, and cannot store enough energy to handle regeneration.

AUX HV

Not required for stand-alone operation, an Aux HV power supply provides power for the drive control circuits so that CAN bus communications with the drive can be maintained when the +HV supply is turned off. This might occur as a result of an Emergency Off condition, or for machine operator intervention. The Aux HV supply does not power the PWM stage that drives the motor, but keeps the drive controller enabled as well as inputs and outputs. The Aux HV supply must be less than the +HV supply voltage and greater than the drive minimum +HV (> 20 Vdc).

GROUNDING

An earthing ground connection can be made via a second conductor to J1-2 that connects to the equipment frame ground.

ENCODER +5 VDC

Encoder power can be supplied from an external +5 Vdc supply or from the amplifier. To use amplifier +5 Vdc @ 250 mA maximum, install jumper JP9-D. If more than 250 mA is required then this must come from an external +5V source and JP9-D must be removed when this is done.

IMPORTANT: REMOVE JP9-D BEFORE CONNECTING EXTERNAL +5V POWER TO J8-1. FAILURE TO DO SO WILL DAMAGE AMPLIFIER!!

DEVELOPMENT KIT CONNECTIONS

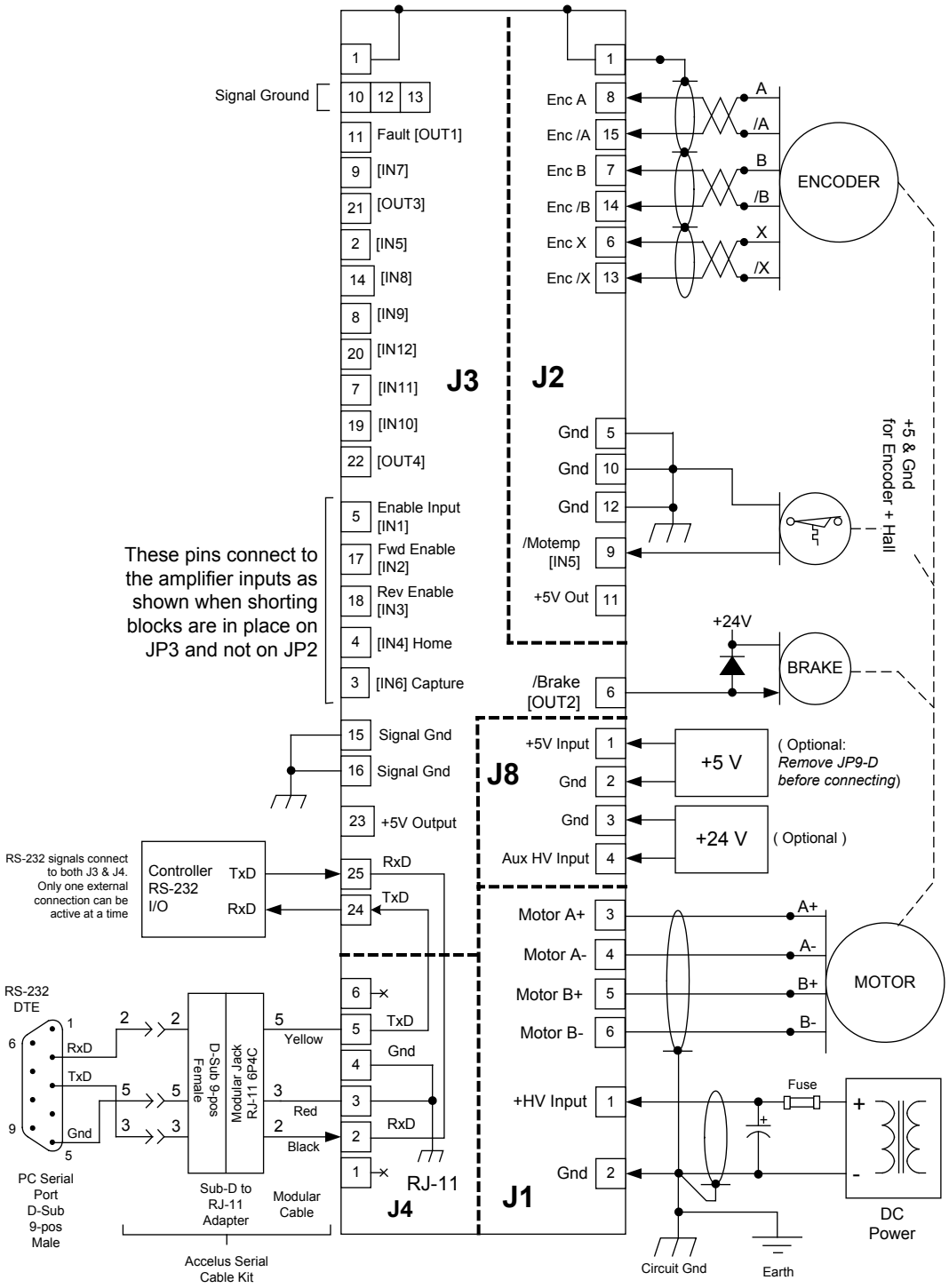

Notes:
1. CAN connectors J6 & J7 are not shown here. For details see pp. 3,6, & 10.

CANopen SIGNALS	PIN
(Reserved)	1
CAN_L	2
CAN_GND	3
(Reserved)	4
(CAN_SHLD)	5

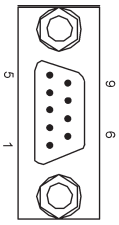

IMPORTANT: REMOVE JUMPER JP9-D BEFORE CONNECTING EXTERNAL +5V POWER TO J8-1. FAILURE TO DO SO WILL DAMAGE AMPLIFIER!!

J8 SIGNALS	PIN
+5V Input	1
Gnd	2
Gnd	3
Aux HV Input	4

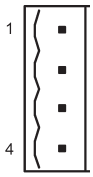

J1 SIGNALS	PIN
+HV Input	1
GND	2
Motor A+ Output	3
Motor A- Output	4
Motor B+ Output	5
Motor B- Output	6

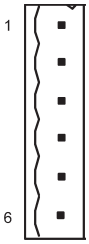

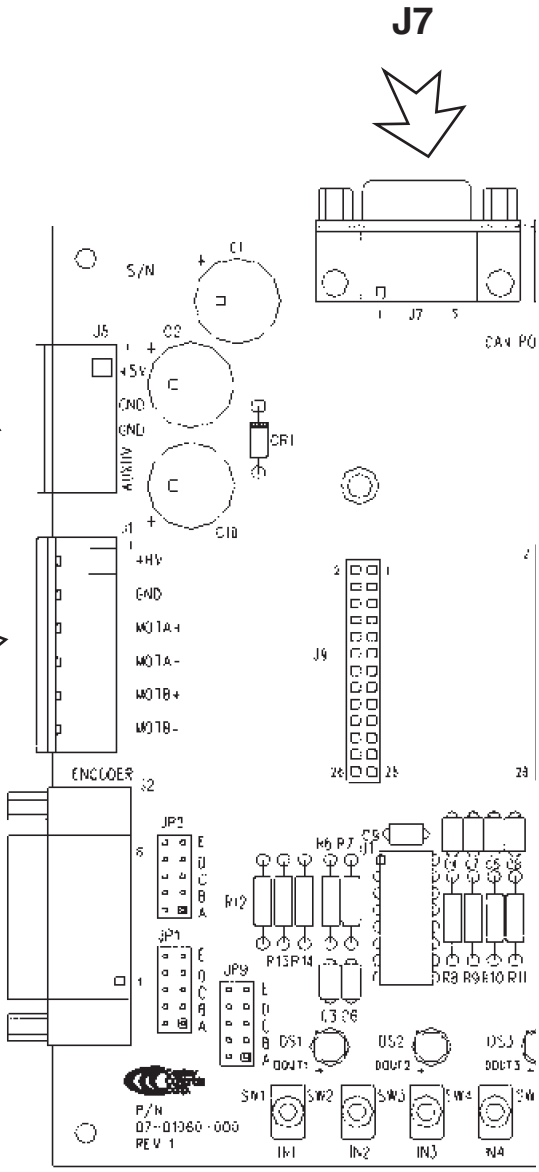

J2 SIGNALS	PIN
Encoder /A Input	15
Encoder /B Input	14
Encoder /X Input	13
Signal Ground	12
+5V Output	11
Signal Ground	10
[IN5]	9

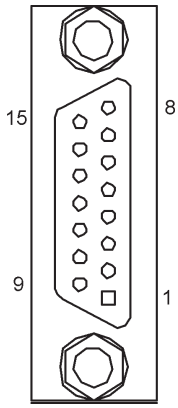

PIN	J2 SIGNALS
8	Encoder A Input
7	Encoder B Input
6	Encoder X Input
5	Signal Ground
4	N.C.
3	N.C.
2	N.C.
1	Chassis Ground

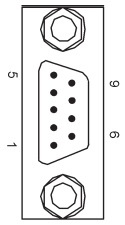

PIN	CANopen SIGNALS
6	CAN_GND
7	CAN_H
8	(Reserved)
9	(CAN_V+)

J6

CANopen Notes:

1. Connector pinouts for J6 & J7 follow CAN standard DS-102.
2. Signals in ( ) are wired-through from J7 to J6 and have no other connections on the pc board.
3. CAN_GND is connected to Gnd on pc board (Stepnet signal and power ground)

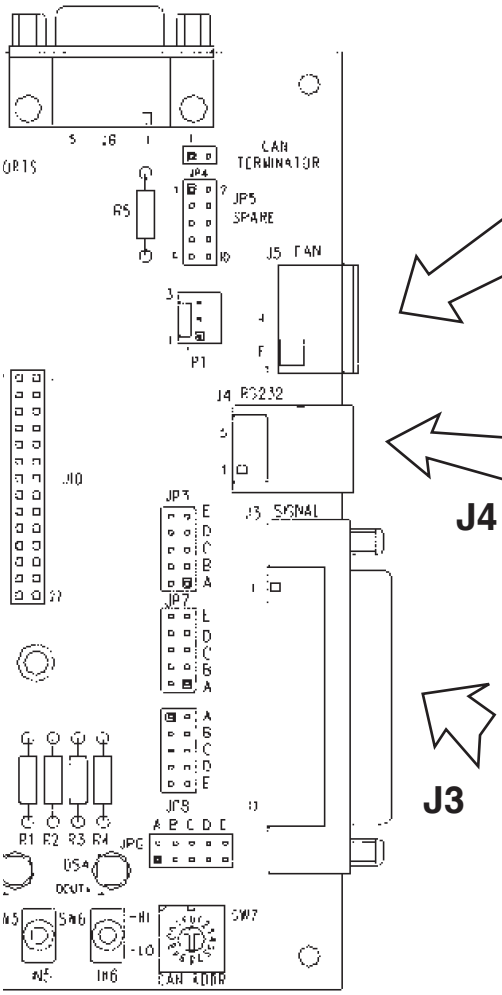

J5

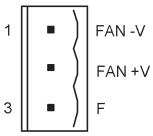

PIN	J5 SIGNALS
1	Fan -V
2	Fan +V
3	F

J4

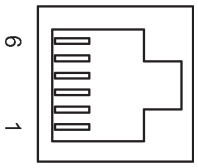

PIN	J4 SIGNALS
6	No Connection
5	TxD Output
4	Signal Ground
3	Signal Ground
2	RxD Input
1	No Connection

J3

J3 SIGNALS	PIN
Chassis Ground	1
Motemp [IN5]	2
GP Input [IN6]	3
GP Input [IN4]	4
Enable Input [IN1]	5
Output [OUT2]	6
HS Input [IN11]	7
HS Input [IN9]	8
HS Input [IN7]	9
Signal Ground	10
Output [OUT1]	11
Signal Ground	12
Signal Ground	13

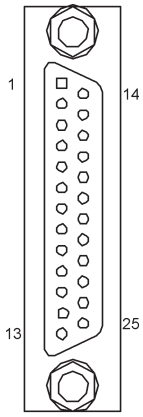

PIN	J3 SIGNALS
14	[IN8] HS Input
15	Signal Ground
16	Signal Ground
17	[IN2] POS Limit Switch
18	[IN3] NEG Limit Switch
19	[IN10] HS Input
20	[IN12] HS Input
21	[OUT3] Output
22	[OUT4] Output
23	5 Output
24	S232 T Output
25	S232 Input

APPLICATIONS

Control stepper and servo motors over a CAN bus

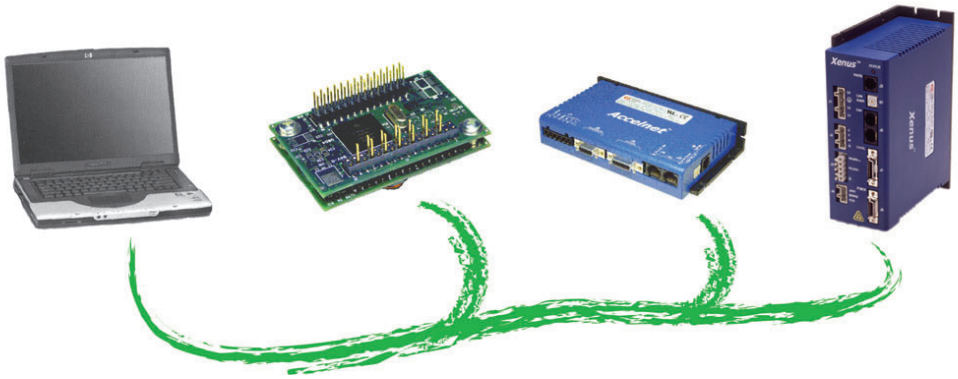

Take stepper pulse signals from external motion controllers

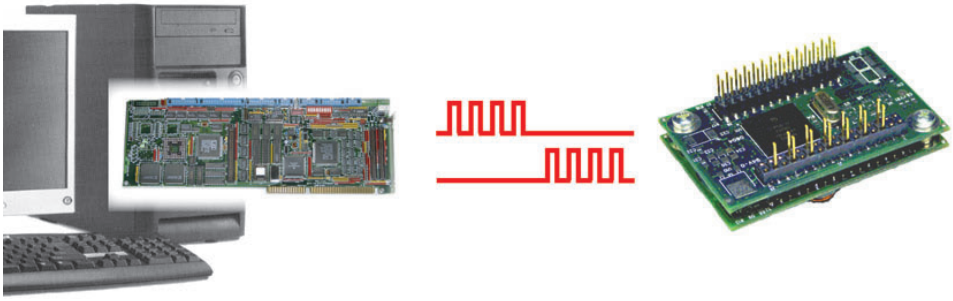

ORDERING GUIDE

PART NUMBER	DESCRIPTION
STL-055-04	*Stepnet Micro* Stepper Driver 3/4.5 Adc @ 55 Vdc
STL-075-03	*Stepnet Micro* Stepper Driver 2/3 Adc @ 75 Vdc
LDK-075-01	*Stepnet Micro* Development Kit
LDK-CK	*Stepnet Micro* Development Kit Connector Kit
SER-CK	Serial Cable Kit (1 per compute,for use with development kit)
CME2	CME 2™ CD (CME 2 program, manual in .pdf file format)

ORDERING INSTRUCTIONS

Example: Order 1 STL-055-04 driver with Development Kit, Development Kit Connector Kit, Serial Cable Kit, and CME 2.

Qty	Item	Remarks
1	STL-055-04	*Stepnet Micro Module* driver
1	LDK-075-01	*Stepnet* Development Kit
1	LDK-CK	Connector Kit for Development Kit
1	SER-CK	Serial Cable Kit
1	CME2	*CME 2* CD

ROHS COMPLIANCE

Models with the green leaf symbol on the label are RoHS compliant.

Note: Specifications subject to change without notice

Copley Controls, 20 Dan Road, Canton, MA 02021, USA
Tel: 781-828-8090
Fax: 781-828-6547
Web: www.copleycontrols.com